BELDEN
SENDING ALL THE RIGHT SIGNALS

Case Study

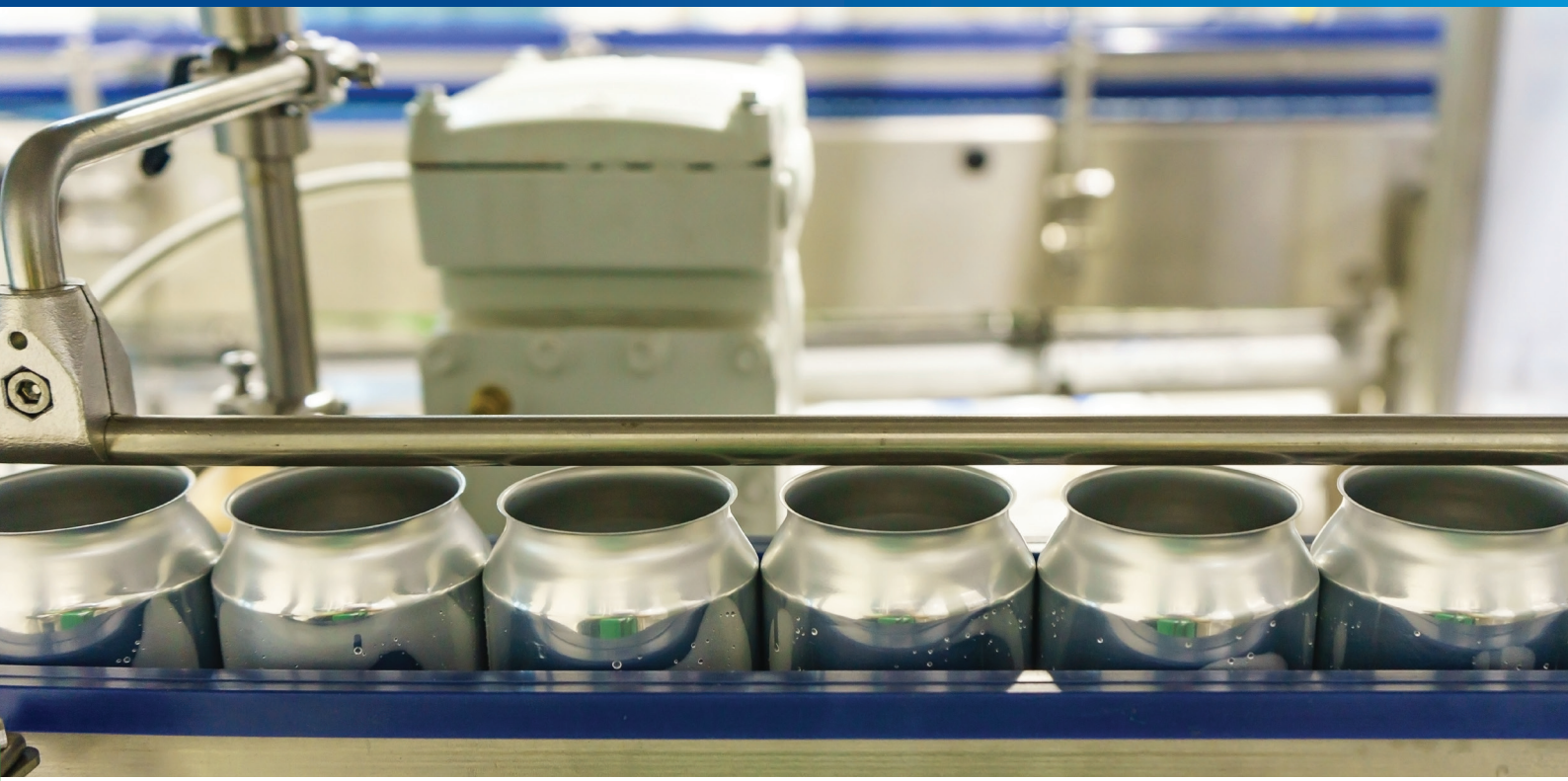

Packaging Manufacturer Modernizes Plant to Increase Efficiency

Plant shifts to an expandable Belden/Hirschmann architecture for a comprehensive automation infrastructure solution with an industry-leading warranty.

Project Overview

Companies in continuous operation for more than a century often have one thing in common – to stay competitive, they must evolve with the needs of their customers. In manufacturing, that often means adding processes, increasing output or modernizing equipment.

However, at a certain point in discrete manufacturing, the machinery itself reaches peak efficiency. In these cases, manufacturers turn to full system and network upgrades, such as end-to-end automation and heightened connectivity of smart devices, in order to improve production and simplify maintenance.

With 146 manufacturing plants in 36 countries, Crown Holdings – formerly Crown Cork & Seal – is one of the largest beverage, food, aerosol and specialty packaging companies in the world. One of Crown's facilities, an aluminum can manufacturing plant in Kankakee, Illinois, is a leading supplier of aluminum cans to major multinational beverage companies.

Crown Holdings

Crown Holdings, a 125-year-old global packaging manufacturer, brought its Illinois-based aluminum can plant into the 21st century with a complete, end-to-end automation infrastructure. A fiber optic backbone and easy-to-use network components ensure a future-proof architecture for changing needs and future growth.

HIRSCHMANN
A BELDEN BRAND

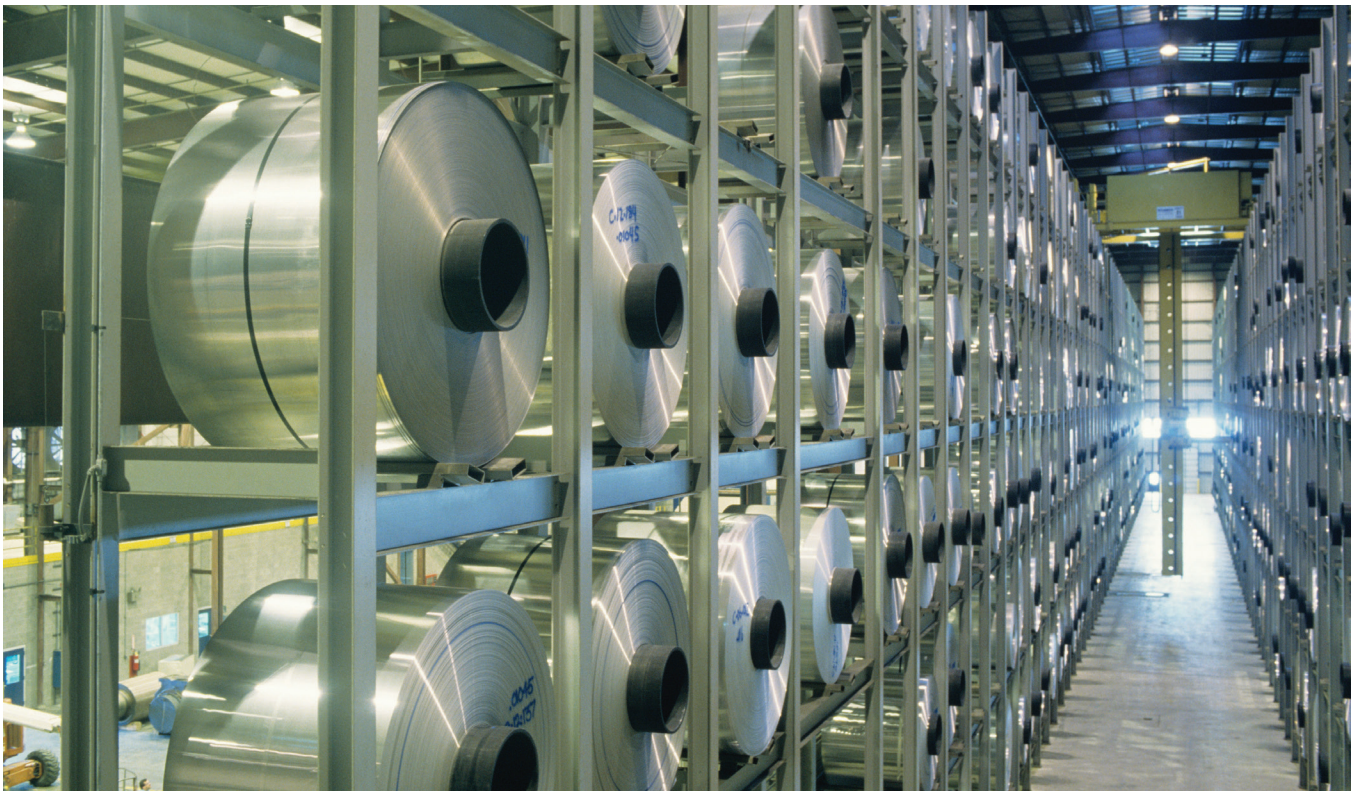

Beverage companies rely on Kankakee's cans to arrive on-time and without defect to fill them with everything from soft drinks to craft beers. Any unforeseen delays or downtime can handicap the entire beverage supply chain. To help maintain Crown's overall position as the No. 2 producer of beverage cans in the world, the Kankakee plant needed to enter the 21st century.

This facility, located south of Chicago, contains highly specialized equipment designed to automate numerous processes in the production of 12-ounce aluminum cans. From washers and sprayers to a palletization station that prepares the new cans for shipment, each process has been controlled with discrete and analog inputs and outputs. Each line connected discretely to manufacture aluminum cans, but the process was minimalistic with regards to network communication.

Also, if defective products began rolling off the line, a shutdown required each component to be inspected individually to pinpoint issues, and manual data logging was required to keep track of repairs.

To more easily troubleshoot and maintain their operations – as well as to limit potential downtime – Crown determined it was necessary to network its Kankakee production lines for the first time. With its reputation for high-quality industrial cabling, connectivity and networking components, Belden and its network of partners were contracted to outfit the facility with a brand-new network with the latest technology.

Project Needs and Challenges

- Can-making lines represent a crucial step in the beverage industry. Each line produces up to 1,800 cans per minute and 6.2 million cans per day. Line stoppages from unexpected maintenance can mean lost revenue and backups along the entire supply chain.
- Existing machinery was not networked together – the facility was operated by discrete and analog controls with PLCs in separate areas of the plant.
- Speed was critical: all network upgrades and equipment installation had to be performed during factory-planned outages, which only occur 1-2 days per year and last less than 24 hours.
- Installation planning must be done far in advance and operate as smoothly as possible. Any work not completed would be delayed by up to a year.
- The solution had to be implemented within 12 months.
- Networking and communication components needed to be simple to use and configure.

The Belden Solution

To not only update the manufacturing plant, but prepare it for the next 100 years of service, a robust solution was required for both current and future needs.

Jumping at the rare opportunity to design a future-proof network from the ground up, Kankakee's engineering and process control managers partnered with one of Belden's certified, preferred distribution partners – Standard Electric Supply Co. Together, they designed and planned a comprehensive network infrastructure to handle the facility's specific priorities and requirements.

> *Belden has an excellent track record of providing high-quality network guidance, consultation and support for customers in the Chicago area. We also like to take advantage of Belden's strong brand recognition and high-quality products. I feel that working together as a team on strategies and execution like this is important, especially when our customers can benefit from a comprehensive robust solution."*
>
> *– Jon Herrity, Business Development Specialist, Standard Electric Supply Co.*

With the opportunity to build a network the right way, the first time, the team designed a system with an optimized array of switches and network management software. With the process control manager's previous experience and success with Hirschmann switches, Belden was identified and selected as a partner given its best-in-class industrial solutions and ease of use.

Belden and Standard Electric Supply's recommended approach centered on a network of managed switches built on a fiber optics backbone for fast, reliable data transfer. They also designed a ring topology to support future growth and communication between processes.

Once the design was finalized, the implementation was planned in three phases, to coincide with planned shutdowns. The first two phases concentrated on installing switches and then terminating fiber at the patch panels.

With industrial patch panels at each equipment location, the network ensures the line will be able to connect more managed switches on new or improved equipment, even if current processes do not require machines to be able to communicate with one another.

The third phase of installation involved setting up the local area network (LAN). Due to the simple nature of Hirschmann products, the configuration of the system by a third-party integrator took only four hours! Despite no prior experience with Hirschmann switches, the integrator didn't require any training or support.

> *"Belden's reputation preceded itself, so we came to them first. Even after weighing their solutions against other options, we came back to Belden. Their unrivaled reputation for local support and knowledge, strong partnership with Standard Electric Supply Co., and their ability to answer any product questions, put us at ease. We knew we could trust and rely on their local expertise to be sure we had support long after the network was installed."*
>
> *– Luke Carter, Engineering Manager, Crown Holdings' Kankakee/Bradley facility*

The partners who handled the network design, product selection and installation ensured seamless support throughout the project and continued to provide continuous, post-installation support.

With a new, easy-to-use network in place, plant operators now have full visibility of the network and can identify errors or issues immediately. Furthermore, Crown can rest assured that the network receives ongoing support from Belden through the extended warranty on all switches on the network connected by Belden fiber optic cable.

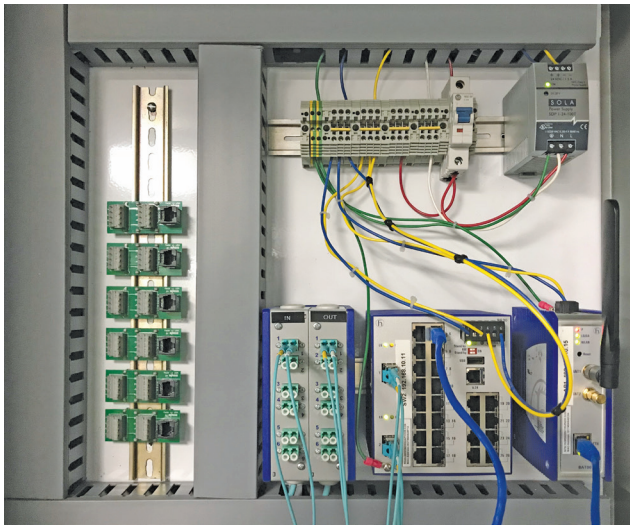

The components were selected for ease of use, length of service and expandability, creating an infrastructure built to last Crown the next century.

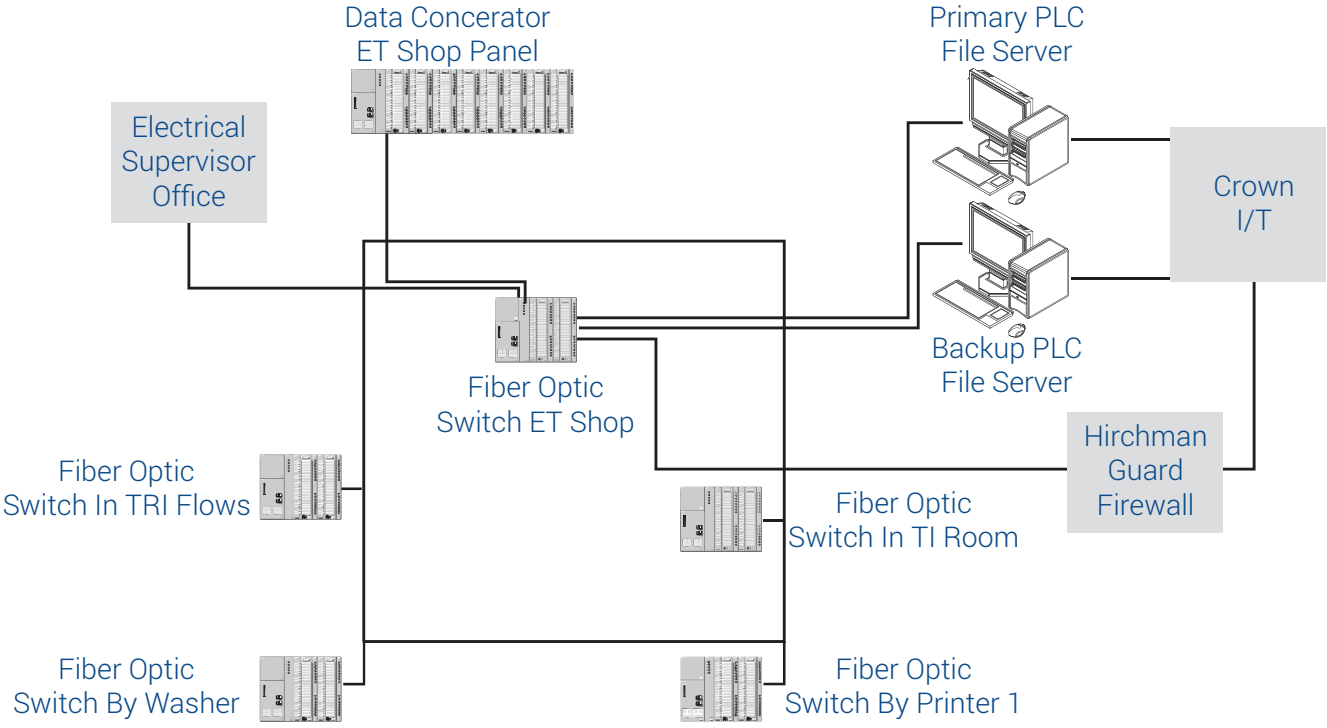

Product Details

To create a future-proof network that could meet the demands of the customer, the following Belden and Hirschmann products were chosen for Crown's Kankakee plant.

RS30 Managed Ethernet Switches

Ideal for networks that combine Fast and Gigabit Ethernet speeds, these hardened, compact managed industrial DIN rail switches provide optimum flexibility with several thousand variants. Choose one of the most common configurations or easily customize a switch to the environment. Get customized switches for the same price as standard devices, and benefit from:

- Consistent and reliable performance for maximum uptime
- High data security with multiple security mechanisms
- Satisfies a broad range of application scenarios with industry-specific certifications

Modular Industrial Patch Panels (MIPPs)

When copper and fiber cables need to be connected from your operating environment to active equipment, the Modular Industrial Patch Panel (MIPP) works. This robust and versatile termination and patching panel installs easily on any standard 35mm DIN rail. It features high port density in a small footprint, so you can expand the network as your connectivity demands increase. Rely on this MIPP for performance-critical industrial Ethernet applications:

- Combines up to six modules to create a single panel for both fiber and copper cables for maximum flexibility
- Quick and easy installation with greater efficiency and less maintenance
- Compact design for maximum use of space

BAT867-R Wireless Access Points

Transmit data quickly – up to 867 Mbps – with the BAT867-R industrial wireless access point. This device supports high-speed IEEE 802.11ac data rates, making it the fastest wireless device in Belden's portfolio. Its rugged design, compact size and select feature set help applications maximize efficiency and performance. The BAT867-R is ideal for industrial settings where space and budgets are limited, such as discrete automation and machine building settings.

- Enable high-speed data transmission. Backward compatible to a/b/g/n standards.
- Comply with the challenging requirements and approvals of industrial markets
- Can be used as an access point, client, router or bridge.
- Enjoy flexibility by monitoring and operating machines from wireless tablets or smartphones.

SFP Fiber Optic Gigabit Ethernet Transceivers

Hirschmann offers a flexible line of fiber optic and copper SFP transceivers for Ethernet products. With a variety of different transmitter and receiver options available, users can choose the correct transceiver for each link to provide the required optical reach over fiber when fiber is chosen—or the correct data rate and connection when twisted pair copper is used.

- Fiber and copper SFP transceivers are available in single or multi-mode
- Select from Fast Ethernet, Gigabit Ethernet, 10 Gigabit Ethernet, and Bi-Directional Gigabit Ethernet
- The body size of SFP is about half of traditional GBIC, saving valuable operation space

Engineering Manager Luther (Luke) Carter surveys the Belden solutions designed especially for the installation at Crown.

DataTuff Cat5e Industrial Ethernet Cable

Belden's DataTuff Cat 5e cord are specifically engineered for superior electrical performance and outstanding noise immunity. Belden DataTuff shielded industrial Ethernet cables are designed for switch gear and motor control center (MCC) applications in tough EMI environments make them perfect for any industrial application.

- Ruggedized construction for reliability in harsh conditions to lower risk and optimize network efficiency
- Deployable in pre-existing 600V cable trays for cost-effective installation.
- Designed with 24 AWG Bonded-Pair solid bare copper conductors, polyolefin insulation, 24 AWG stranded tinned copper drain wires and industrial grade oil- and sunlight-resistant PVC jackets.

FiberExpress Distribution Cables

Belden's popular tight-buffered multi-fiber distribution cables are available in fiber counts from 2 to 144. Their small bend radius and 900µm tight-buffered fibers allow for fast installations and easy terminations. This construction makes them perfect for use in:

- Designed for both indoor and indoor/outdoor applications
- Available in plenum, riser, unitized and non-unitized constructions for a variety of installations

Industrial HiVision Network Management Software

Used in thousands of facilities around the world, Hirschmann's Industrial HiVision is a proven network management solution to configure and monitor industrial Ethernet networks.

This software:

- Provides at-a-glance visibility of key network performance and security indicators with a visual network dashboard.
- Configures hundreds of SNMP-enabled devices from any manufacturer simultaneously, saving time and reducing errors.
- Recognizes and accurately visualizes network topology automatically.
- Generates alerts when unauthorized changes are made, rogue devices are added or MAC/IP address pairs change.

BELDEN
SENDING ALL THE RIGHT SIGNALS

About Belden

Belden Inc., a global leader in high quality, end-to-end signal transmission solutions, delivers a comprehensive product portfolio designed to meet the mission-critical network infrastructure needs of industrial, enterprise and broadcast markets. With innovative solutions targeted at reliable and secure transmission of rapidly growing amounts of data, audio and video needed for today's applications, Belden is at the center of the global transformation to a connected world. Founded in 1902, the company is headquartered in St. Louis, USA, and has manufacturing capabilities in North and South America, Europe and Asia.

For more information, visit us at:
www.belden.com
www.beldensolutions.com
follow us on Twitter @BeldenIND

Americas
1-800-BELDEN-1
www.belden.com

EMEA
+49(0) 7127 14 1809
www.beldensolutions.com

CROWN-CORK-CASE-STUDY_CS00029_INCA_BDC_0218_ENG

Be certain.
Belden.